1800M3 gjennomstrømmnings-anlegg.

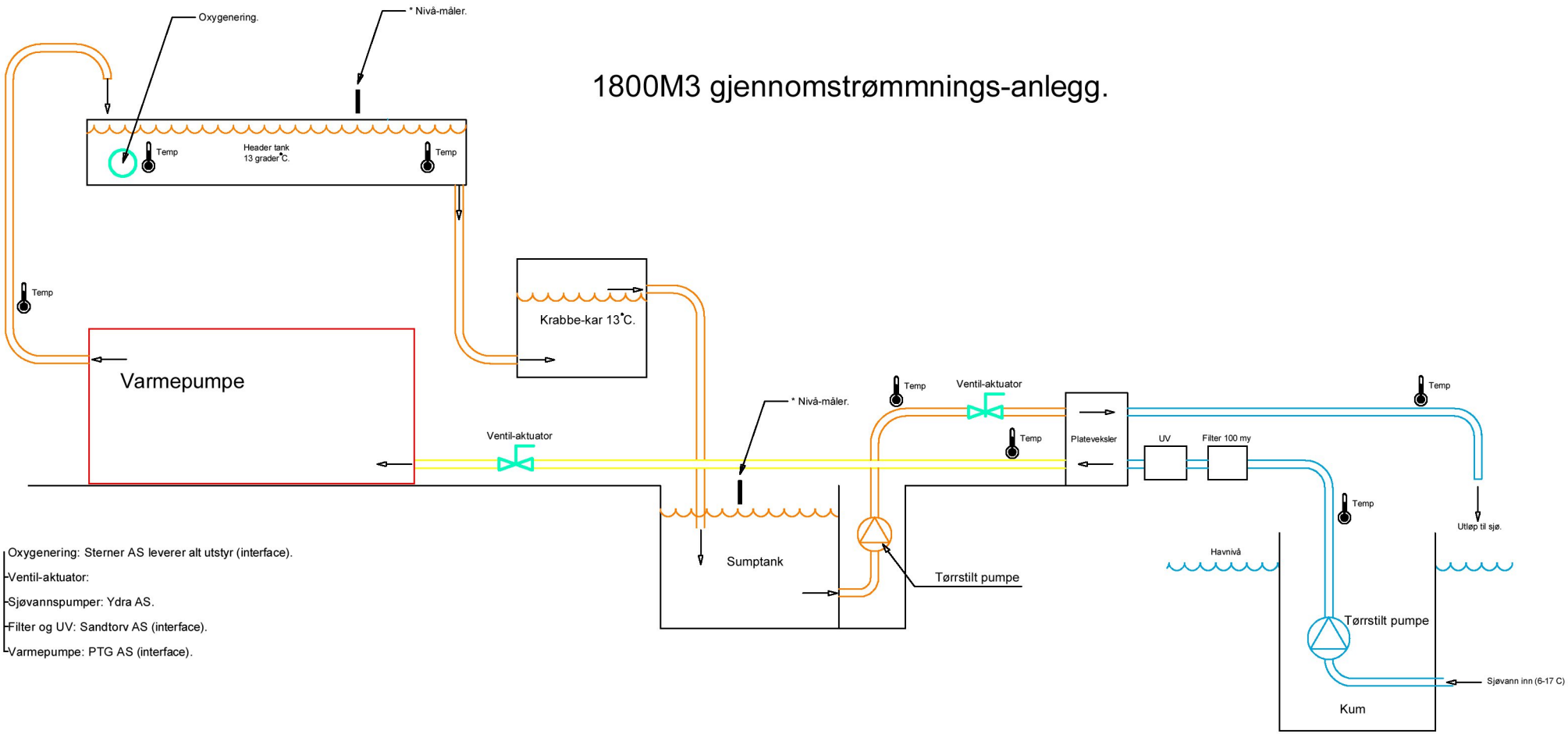

Oxygenering: Sterner AS leverer alt utstyr (interface).

Ventil-aktuator:

Sjøvannspumper: Ydra AS.

Filter og UV: Sandtorv AS (interface).

Varmepumpe: PTG AS (interface).